TCI Part Number	Rated Amps (A)	---uH +8%/-2%	Approx Weight (LBS)
KTR20A65HL	50.6	1306	90

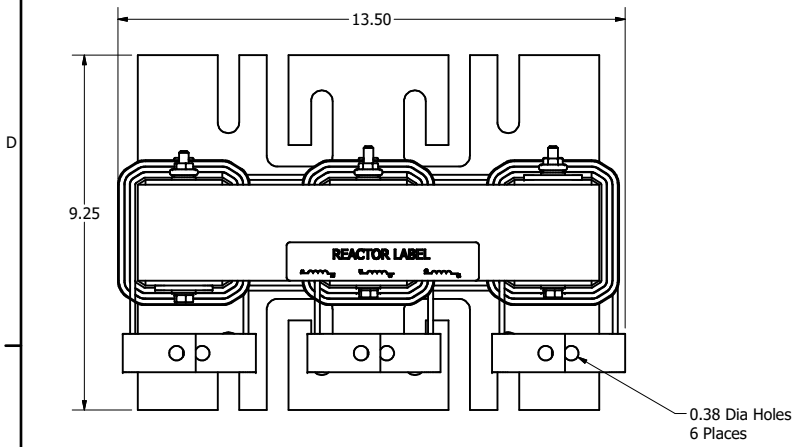

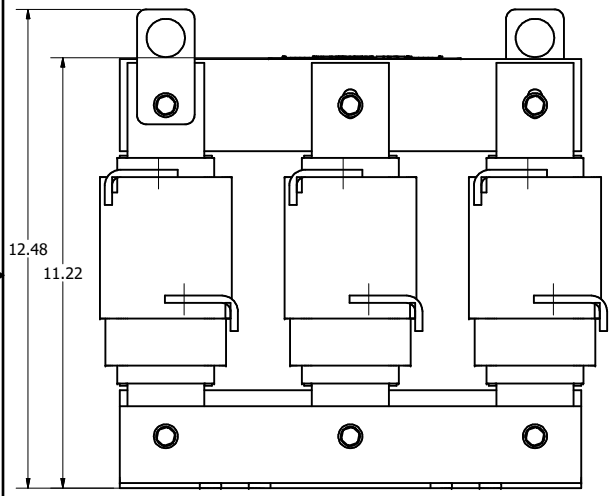

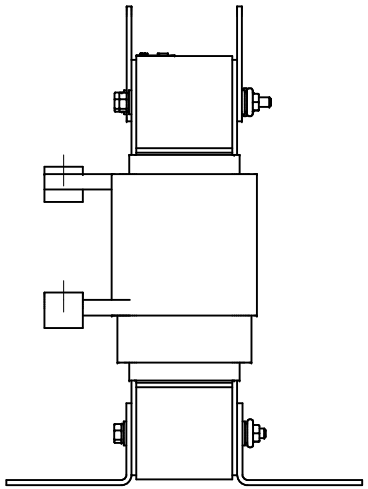

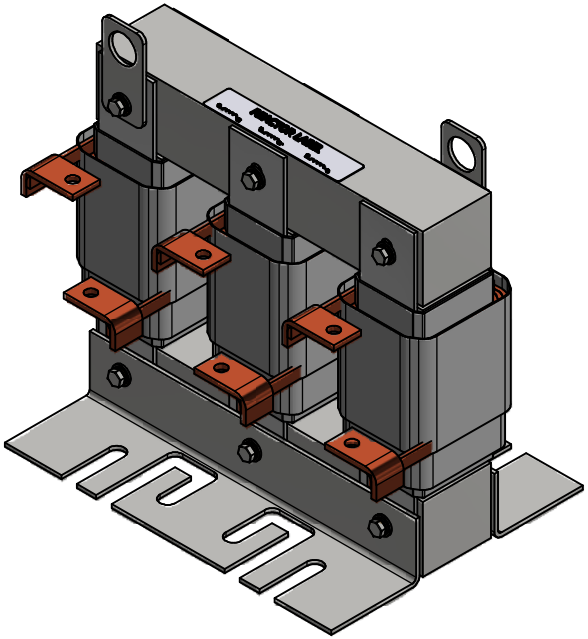

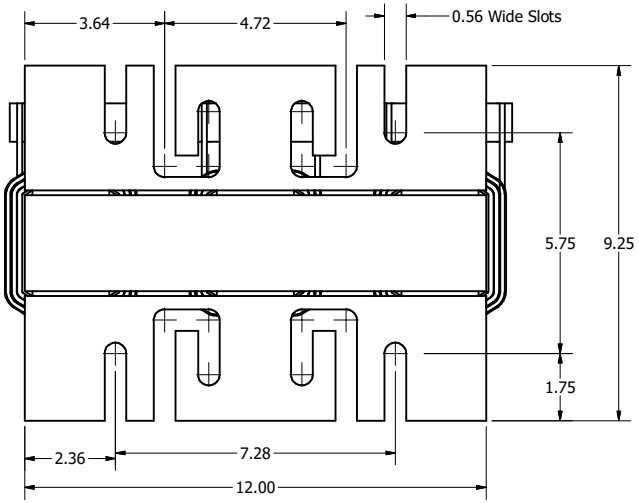

Customer Is Responsible For Installation to
Meet All National And Local Electrical Codes.

Material(s) Shall be RoHS Compliant

TCI, LLC CLAIMS PROPRIETARY RIGHTS IN THE MATERIAL HEREIN DISCLOSED. IT IS SUPPLIED WITHOUT PREDJUDICE TO ANY PATENT RIGHTS OF TCI AND MAY NOT BE REPRODUCED OR USED TO MANUFACTURE ANYTHING SHOWN THEREIN WITHOUT WRITTEN PERMISSION FROM TCI.

NO	REVISION	DATE	BY
C	5247, Coil Redesigned	5/6/2020	DSW

TOLERANCES (EXCEPT AS NOTED)
DECIMAL .XX ± .25 .XXX ± .10
FRACTIONAL ± 1/16
ANGULAR ± 1°

TCI
W132 N10611 Grant Drive
Germantown, WI 53022

Tuning Inductor, 125HP,51 Amps
480V, (High Inductance)

DRN. BY: DSW | DATE: 11/23/15 | 106240DG
SCALE: | APRVD: | SIZE: C | SHT 1 OF 1