KPCUL050A63, 480V, 50kVar, 300 HP
Approx. Weight: 28 Lbs

Customer Input	
Wire Range	Tightening Torque
3/0-350mcm.	230 Lb-In

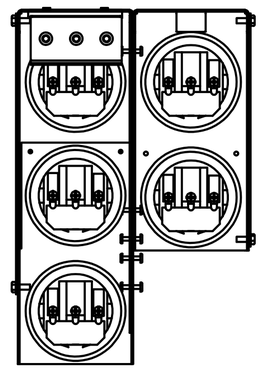

Cap Connection	
Wire Range	Tightening Torque
(2x)14-2 Awg.	31 Lb-In
(5x)14-6 Awg.	17.5 Lb-In
(4x)14-8 Awg.	17.5 Lb-In

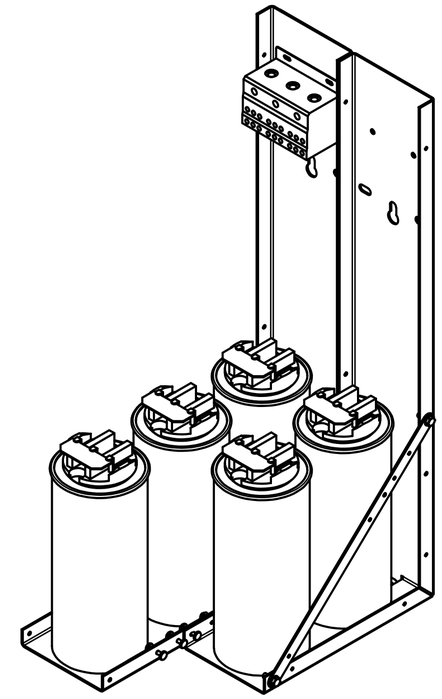

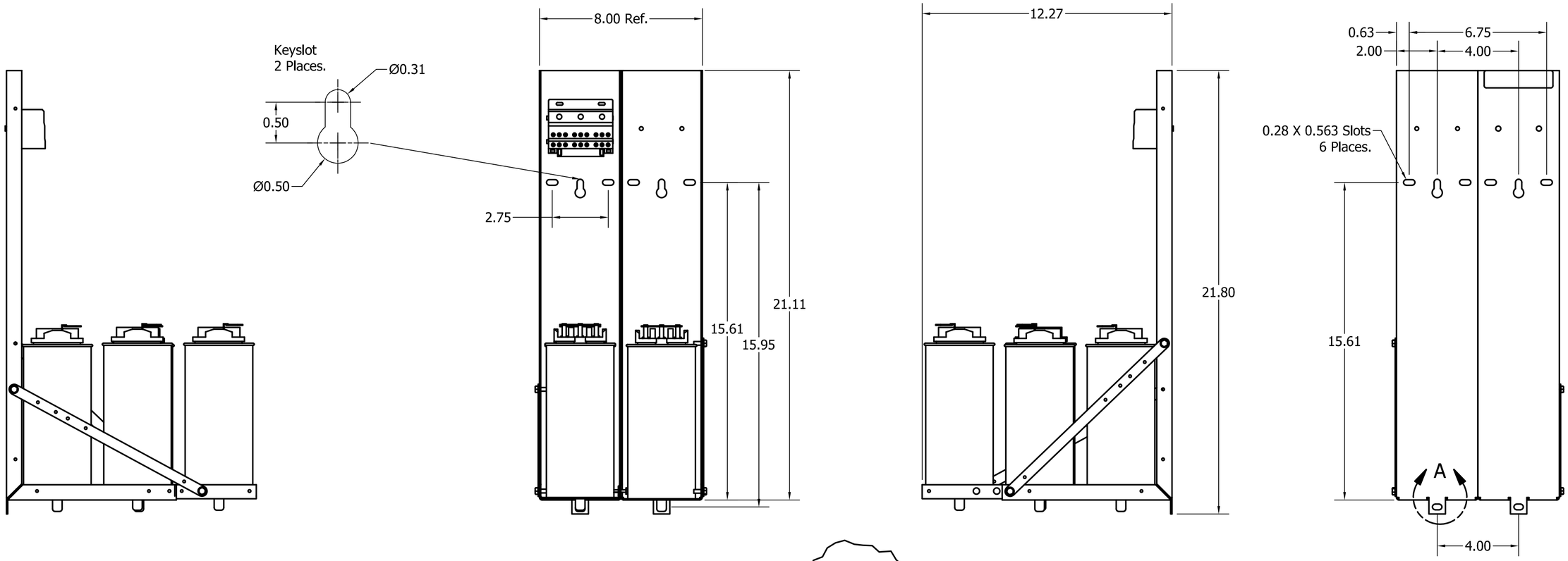

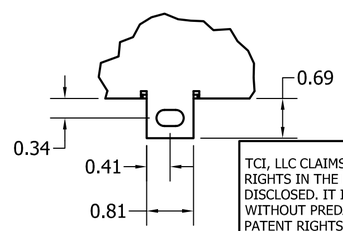

DETAIL A

Note: 27908, Manual KPC Installation Guide
MUST SHIP WITH EACH ASSEMBLY.

TCI, LLC CLAIMS PROPRIETARY RIGHTS IN THE MATERIAL HEREIN DISCLOSED. IT IS SUPPLIED WITHOUT PREDJUDICE TO ANY PATENT RIGHTS OF TCI AND MAY NOT BE REPRODUCED OR USED TO MANUFACTURE ANYTHING SHOWN THERE IN WITHOUT WRITTEN PERMISSION FROM TCI.

NO	REVISION	DATE	BY
A	As Designed	10/04/2017	JRN

TOLERANCES (EXCEPT AS NOTED)
DECIMAL .XX ± .25 .XXX ± .10
FRACTIONAL ± 1/16
ANGULAR ± 1°

TCI
W132 N10611 Grant Drive
Germantown, WI 53022

KPCUL050A63, 50 kVar., 300HP
Panelized Caps

DRN. BY JRN | DATE: 10/04/17 | 107345DG
SCALE: To Fit | APRVD: | SIZE C | SHT.1 OF 1