KMG8C01A

APPROX WEIGHT: 114LBS

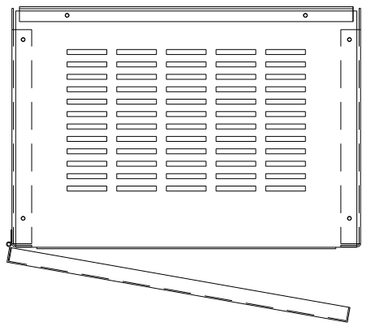

KMG HIGH PERFORMANCE OUTPUT FILTER

PART NUMBER: KMG8C01A

FLA: 8 — DRAWING#: 104434DG

SYSTEM VOLTAGE: 600 — SCHEMATIC: 24281-11A

HZ: 80

PHASE: 3

MOTORGUARD

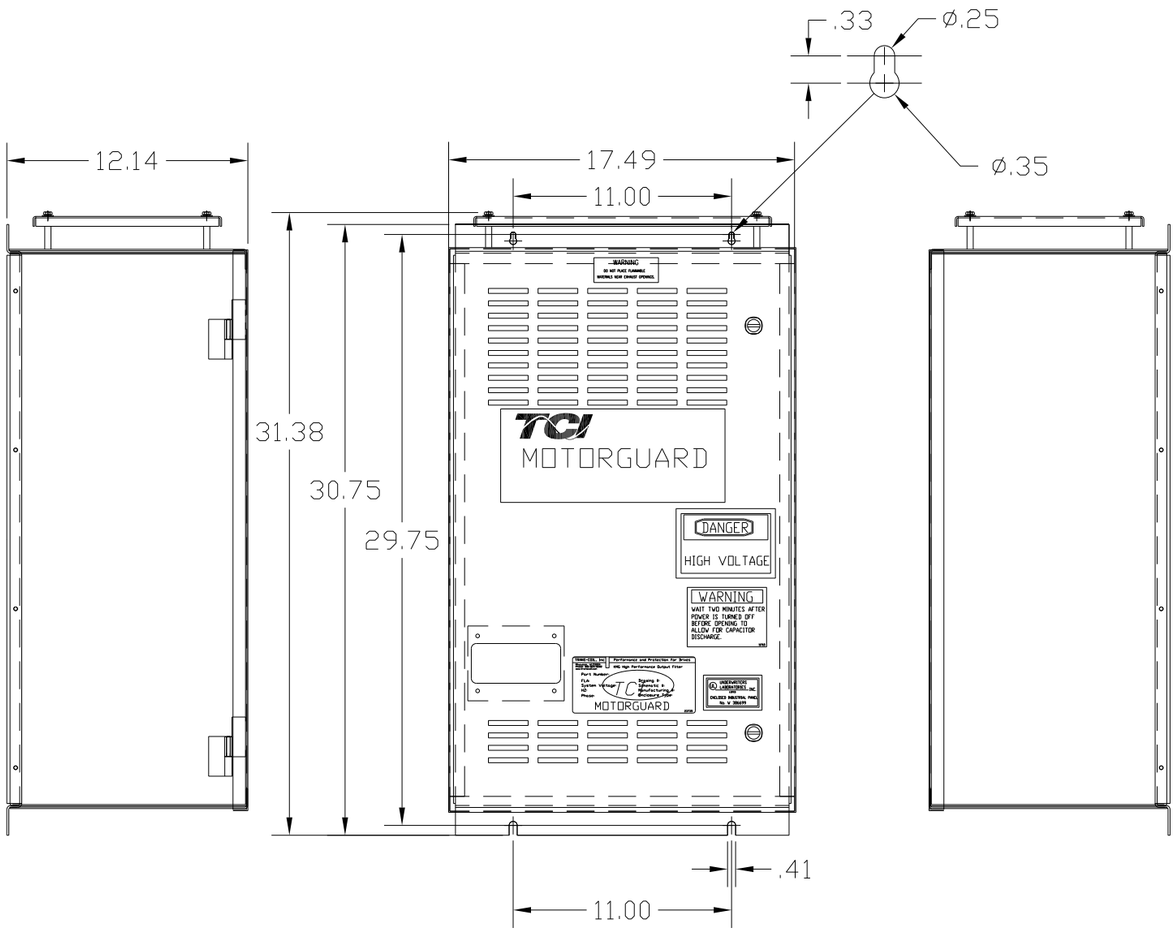

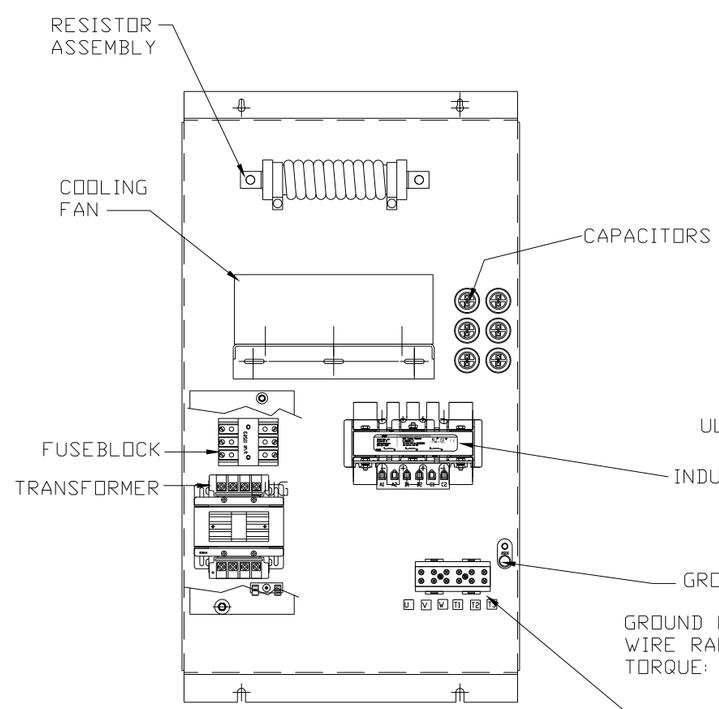

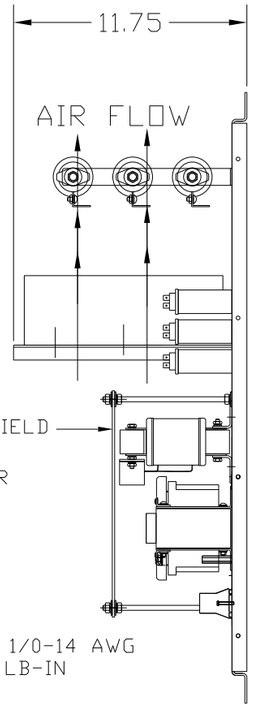

ENCLOSURE NOT SHOWN

CUSTOMER CONNECTIONS

U V W

T1 T2 T3

LINE CONNECTIONS
WIRE RANGE: 1 AWG THRU 4 AWG 35 LB-IN
6 AWG THRU 14 AWG 30 LB-IN
16 AWG THRU 22 AWG 25 LB-IN

FOR SCHEMATIC SEE DRAWING P/N 24281-11A

CUSTOMER IS RESPONSIBLE FOR PROPER INSTALLATION OF ASSEMBLY IN ACCORDANCE WITH LOCAL AND NATIONAL CODES.

NO	REVISION	DATE	BY

TOLERANCES (EXCEPT AS NOTED)
DECIMAL .XX ± .02 .XXX ± .01
FRACTIONAL ± 1/32
ANGULAR ± 1/2°

TCI 7878 N. 86th STREET MILWAUKEE, WI 53224

Standard, SineWave Filter ENCLOSED, 5HP, 8AMP, 600V

DRN. BY DSW — DATE 10/14/2010 — DWG. NO. C 104434DG

SCALE TO FIT — APRVD. — SHT. 1 OF 1