KMG8C00A

APPROX WEIGHT: 59LBS

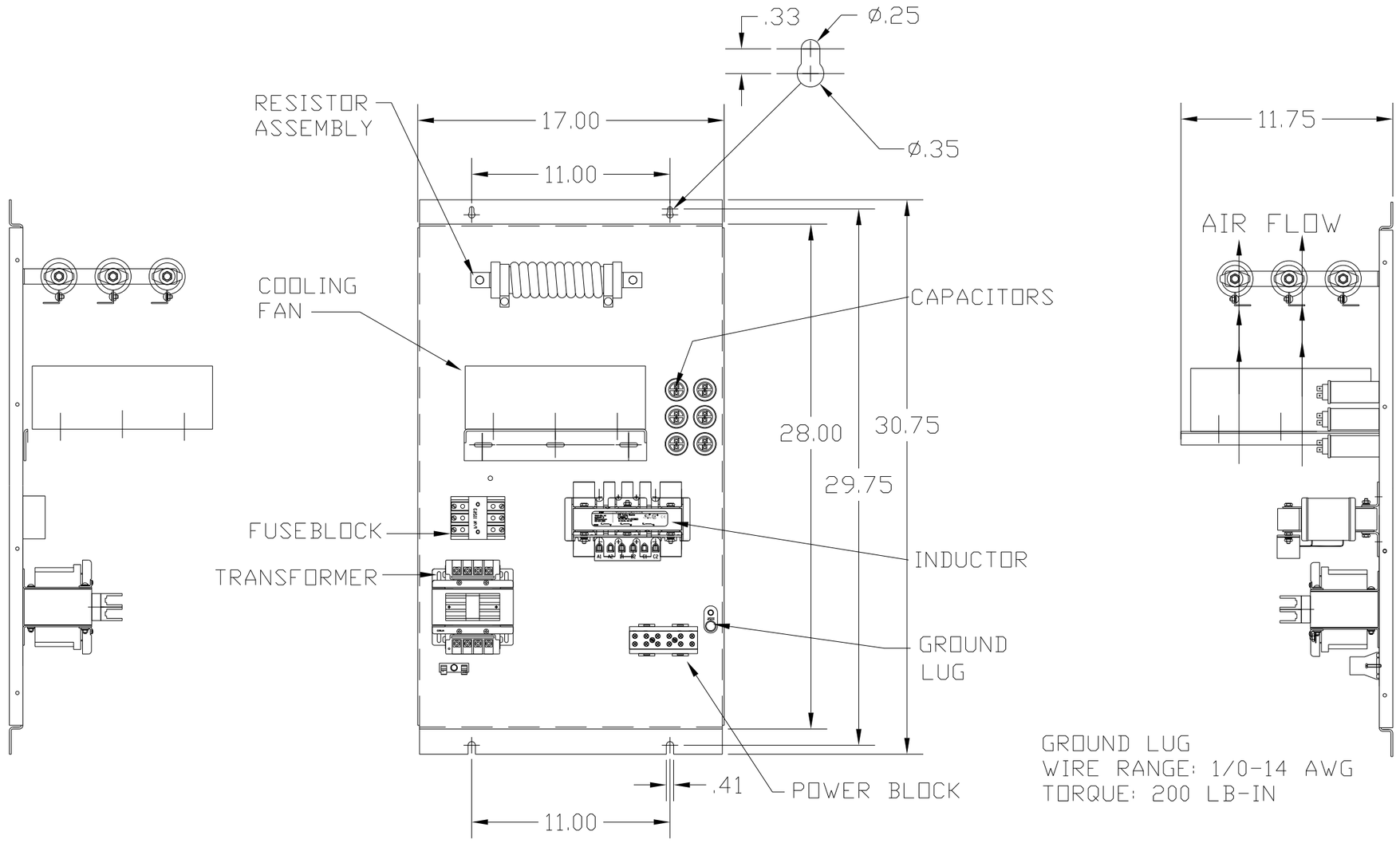

KMG HIGH PERFORMANCE OUTPUT FILTER

PART NUMBER: KMG8C00A

FLA: 8 DRAWING#: 104413DG

SYSTEM VOLTAGE: 600 SCHEMATIC: 24281-11A

HZ: 80

PHASE: 3

MOTORGUARD

GROUND LUG
WIRE RANGE: 1/0-14 AWG
TORQUE: 200 LB-IN

LINE CONNECTIONS
WIRE RANGE: 1 AWG THRU 4 AWG 35 LB-IN
6 AWG THRU 14 AWG 30 LB-IN
16 AWG THRU 22 AWG 25 LB-IN

FOR SCHEMATIC SEE DRAWING P/N 24281-11A

CUSTOMER IS RESPONSIBLE FOR PROPER COOLING OF COMPONENTS IN CUSTOMERS ASSEMBLY.

CUSTOMER IS RESPONSIBLE FOR PROPER INSTALLATION OF ASSEMBLY IN ACCORDANCE WITH LOCAL AND NATIONAL CODES.

NO	REVISION	DATE	BY

TOLERANCES (EXCEPT AS NOTED)
DECIMAL .XX ±.02 .XXX±.01
FRACTIONAL ± 1/32
ANGULAR ± 1/2°

TCI 7878 N. 86th STREET MILWAUKEE, WI 53224

Standard, SineWave Filter Open, 5HP, 8AMP, 600V

DRN. BY DSW | DATE 10/12/2010 | DWG. NO. B 104413DG

SCALE TO FIT | APRVD. | SHT. 1 OF1