GENERAL PURPOSE, 1/3R, COLOR: GREY.

APPROX WT: 630LBS

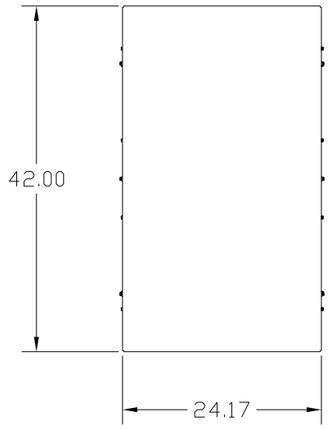

KMG HIGH PERFORMANCE OUTPUT FILTER

PART NUMBER: KMG362AG010000

FLA: 362 DRAWING#: 103891DG

SYSTEM VOLTAGE: 480V SCHEMATIC: 26736

HZ: 80

PHASE: 3 ENCLOSURE TYPE: 1/3R

MOTORGUARD

GROUND LUG
WIRE RANGE: TWO 350MCM-4
TORQUE: 275 LB-IN

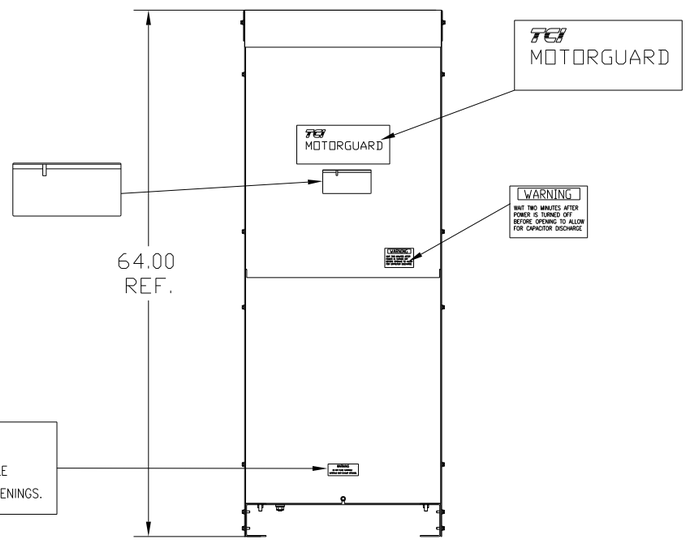

WARNING
DO NOT PLACE FLAMMABLE
MATERIALS NEAR EXHAUST OPENINGS.

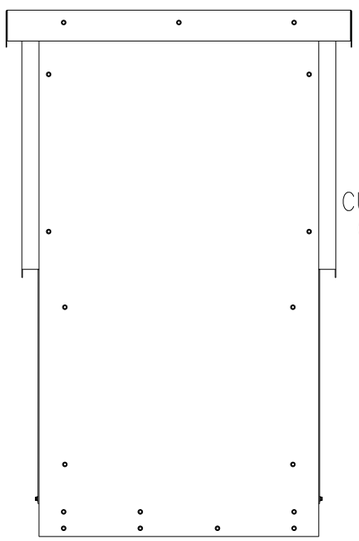

CUSTOMER CONNECTIONS
(.56 DIA HOLES 6 PLACES.)

T1 T2 T3

U V W

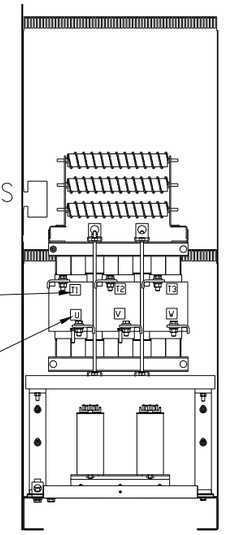

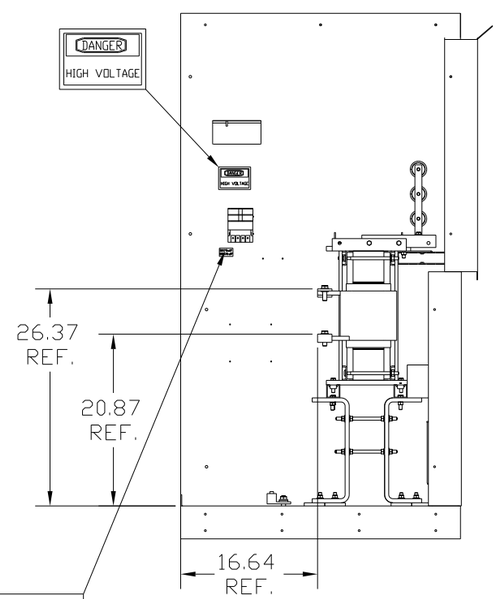

PRIMARY FUSES .75 AMPS
CLASS CC TIME DELAY

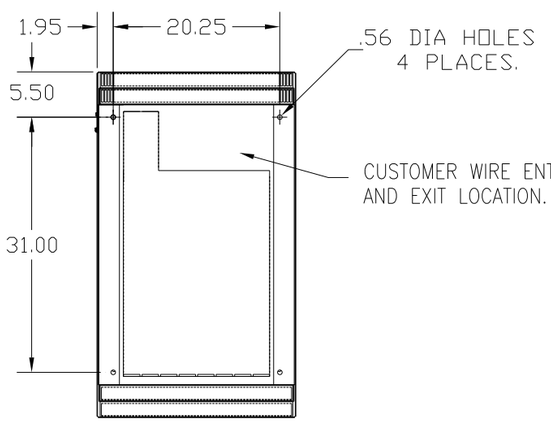

PART NUMBER: KMG362AG010000

FOR SCHEMATIC SEE DWG# 26736

CUSTOMER IS RESPONSIBLE FOR INSTALLATION
TO MEET ALL NATIONAL AND LOCAL ELECTRICAL CODES.

NO	REVISION	DATE	BY

TOLERANCES (EXCEPT AS NOTED)
DECIMAL .XX ±.50 .XXX±.25
FRACTIONAL ± 1/32
ANGULAR ± 1/2°

TCI 7878 N. 86th STREET MILWAUKEE, WI 53224

KMG, LRC FILTER, STANDARD 362AMP, 480/3/80, 1/3R

DRN BY DSW DATE 10/08/08 DWG. NO. D 103891DG
SCALE TO FIT APRVD. SHT. 1 OF 1