KMG250C01A

APPROX WEIGHT: 773LBS

FOR SCHEMATIC SEE DRAWING P/N 24281-23A

KMG HIGH PERFORMANCE OUTPUT FILTER

PART NUMBER: KMG250C01A

FLA: 250 DRAWING#: 104449DG

SYSTEM VOLTAGE: 600 SCHEMATIC: 24281-23A

HZ: 80

PHASE: 3

MOTORGUARD

GROUND LUG
WIRE RANGE: (1)600MCM-#4 AWG
(2)250MCM-1/0 AWG
TORQUE: 500 LB-IN

LINE CONNECTIONS
WIRE RANGE: (1)600MCM-#4 AWG
(2)250MCM-1/0 AWG
TORQUE: 500 LB-IN

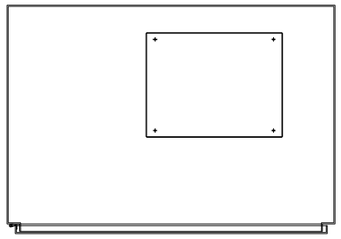

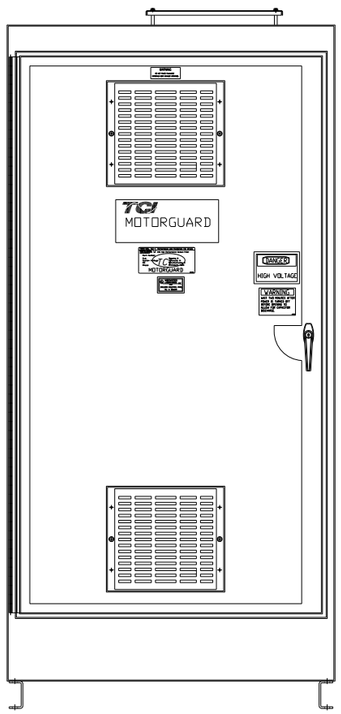

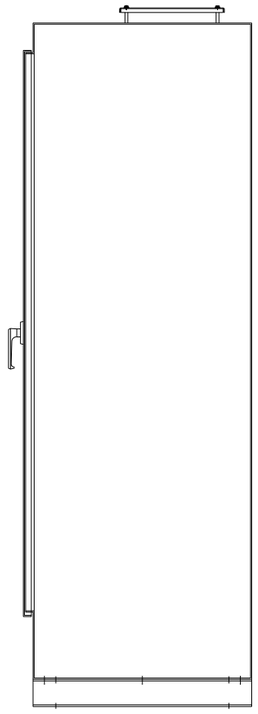

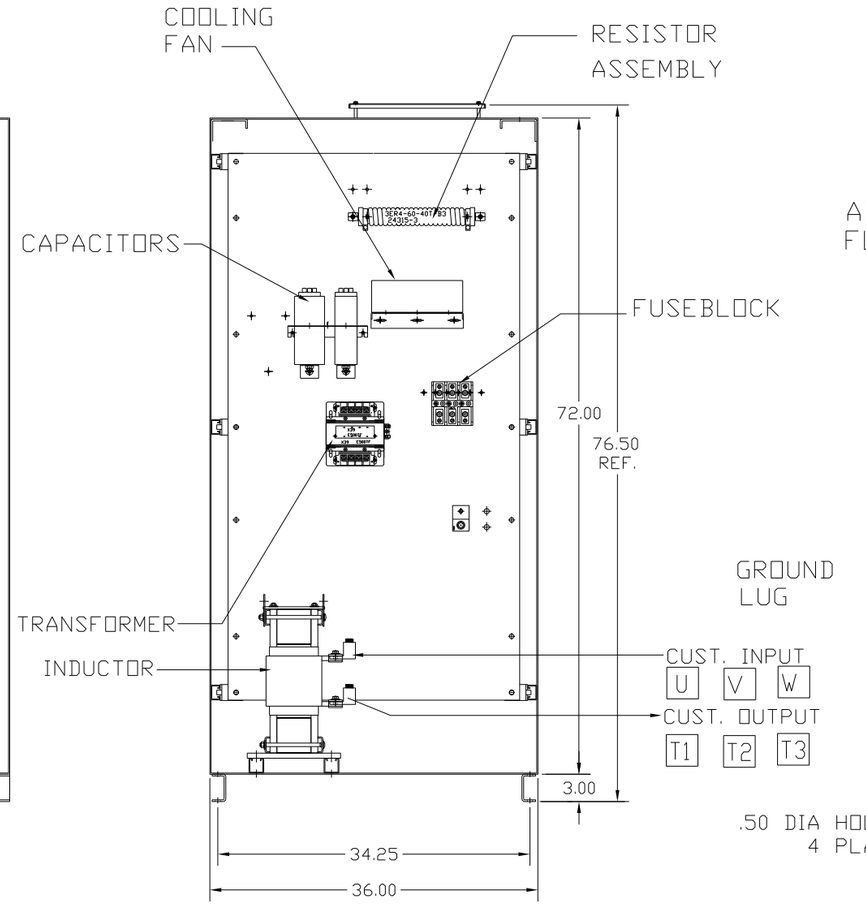

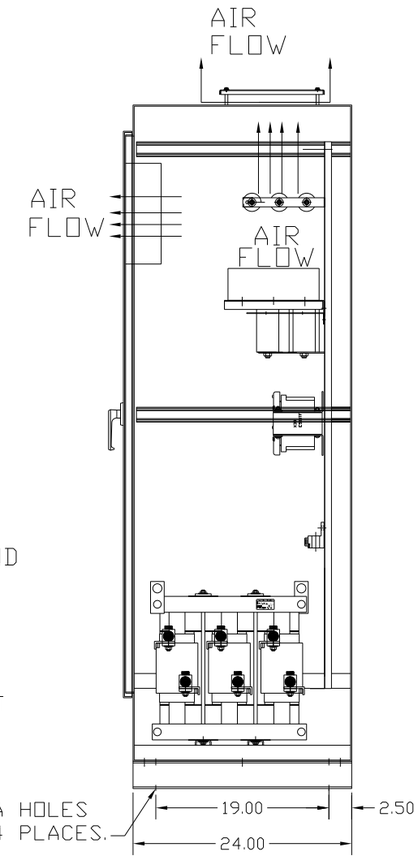

CUSTOMER IS RESPONSIBLE FOR PROPER INSTALLATION OF ASSEMBLY IN ACCORDANCE WITH LOCAL AND NATIONAL CODES.

NO	REVISION	DATE	BY

TOLERANCES (EXCEPT AS NOTED)
DECIMAL .XX ± .02 .XXX ± .01
FRACTIONAL ± 1/32
ANGULAR ± 1/2°

TCI 7878 N. 86th STREET MILWAUKEE, WI 53224

Standard, SineWave Filter
ENCLOSED, 250HP, 250AMP, 600V

DRN. BY DSW | DATE 10/18/10 | DWG. NO. C 104449DG
SCALE TO FIT | APRVD. | SHT. 1 OF 1