GENERAL PURPOSE, 1/3R, COLOR: GREY.

KMG HIGH PERFORMANCE OUTPUT FILTER

PART NUMBER: KMG200CG010000

FLA: 200 | DRAWING#: 103942DG

SYSTEM VOLTAGE: 600V | SCHEMATIC: 26941

HZ: 80

PHASE: 3 | ENCLOSURE TYPE: 1/3R

MOTORGUARD

APPROX WT: 570LBS

PART NUMBER: KMG200CG010000

FOR SCHEMATIC SEE DWG# 26941

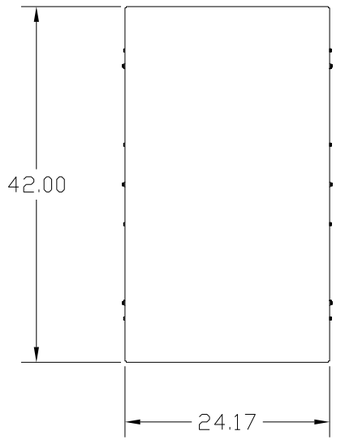

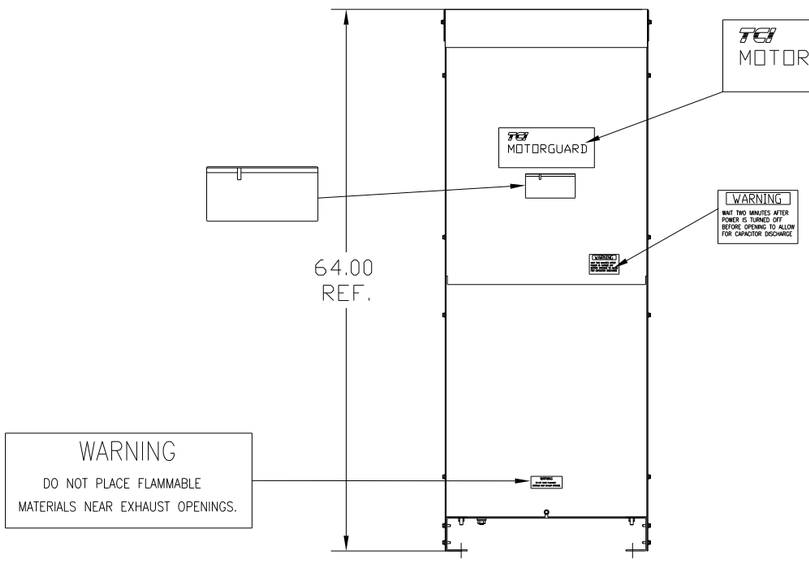

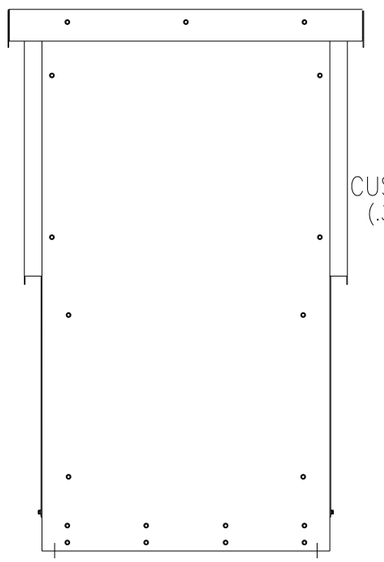

CUSTOMER CONNECTIONS
(.31 DIA HOLES 12 PLACES.)

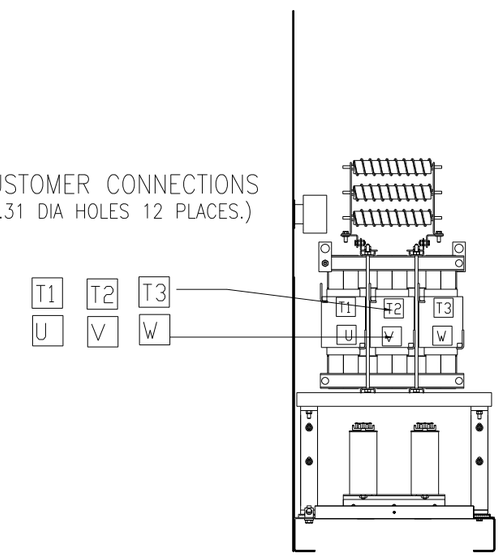

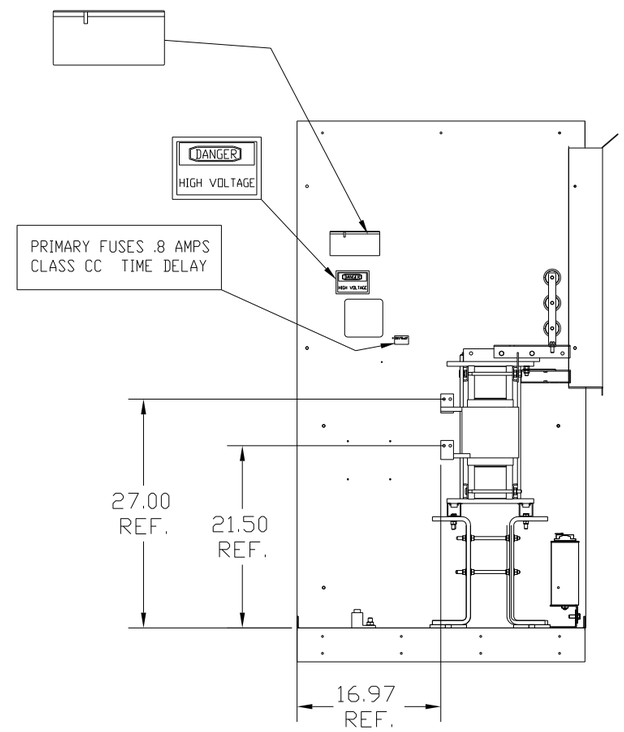

GROUND LUG
WIRE RANGE: TWO 250MCM-6
TORQUE: 275 LB-IN

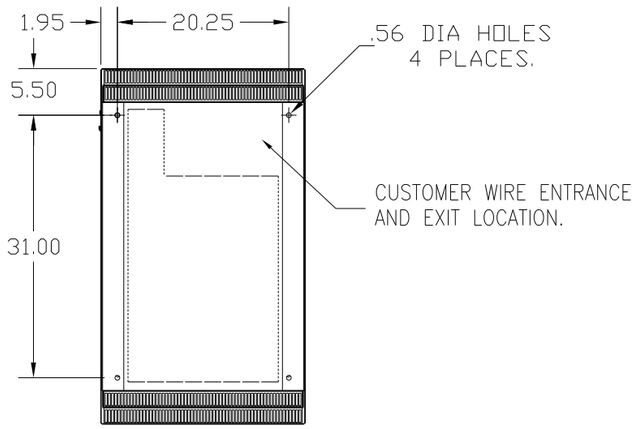

CUSTOMER IS RESPONSIBLE FOR INSTALLATION
TO MEET ALL NATIONAL AND LOCAL ELECTRICAL CODES.

NO	REVISION	DATE	BY

TOLERANCES (EXCEPT AS NOTED)
DECIMAL .XX ±.50 .XXX±.25
FRACTIONAL ± 1/32
ANGULAR ± 1/2°

TCI 7878 N. 86th STREET MILWAUKEE, WI 53224

KMG, LRC FILTER, STANDARD 200AMP, 600/3/80, 1/3R

DRN. BY DSW | DATE 1/28/09 | DWG. NO. D 103942DG
SCALE TO FIT | APRV'D. | SHT. 1 of 1