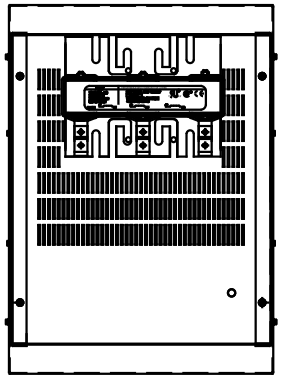

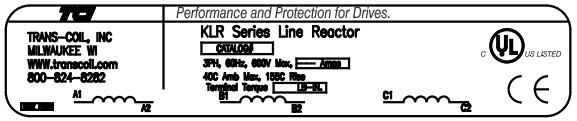

LABEL PLACED ON INSIDE WALL OF CABINET.

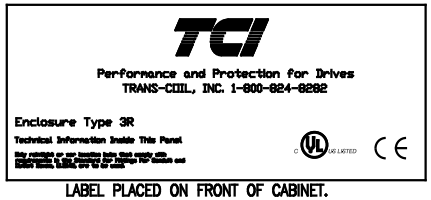

LABEL PLACED ON FRONT OF CABINET.

CATALOG NO	VOLTS(V.)	__mH-±10%	__AMPS(A)	APPROX WT-LBS
KLRUL160CPTE3R	24.0	.230	160	159
KLRUL160EPTE3R	28.75	.275	160	159
KLRUL200APTE3R	14.4	.110	200	157
KLRUL200DPTE3R	17.25	.132	200	157

LUG WIRE RANGE FOR REACTOR.	250MCM-6, AL OR CU.
TIGHTENING TORQUE.	275 LB-IN

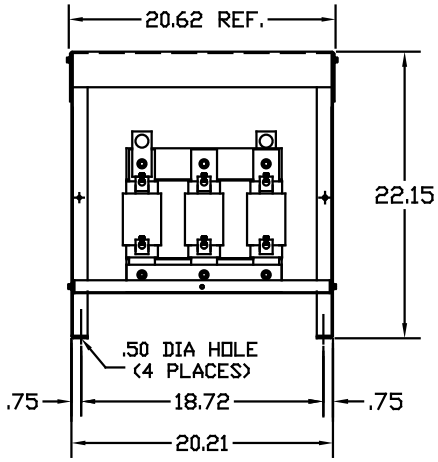

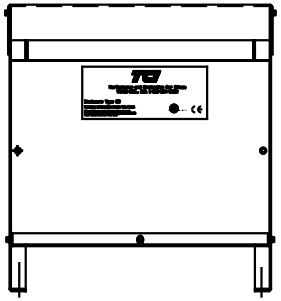

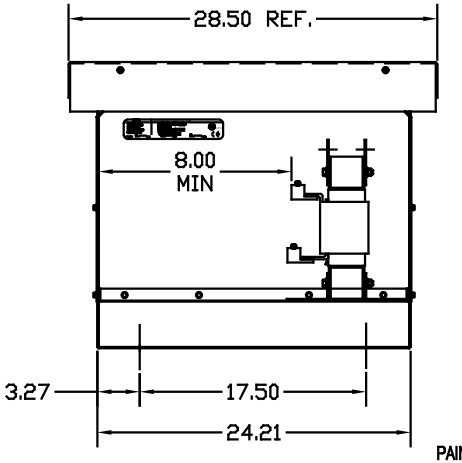

VENDOR LILLY POWDER COATINGS, INC.
PRODUCT CODE 312E
COLOR PEBBLE GRAY
POWDER TYPE POLYESTER POLYURETHANE

PAINT SUITABLE FOR OUTDOOR APPLICATION PER UL TYPE 3R AND APPLIED PER A UL ACCEPTED DTVV2 COATING PROGRAM.

CUSTOMER IS RESPONSIBLE FOR INSTALLATION TO MEET ALL LOCAL AND NATIONAL CODES

NO	REVISION	DATE	BY

TOLERANCES (EXCEPT AS NOTED)
DECIMAL
.XX ±.03
.XXX±.01
FRACTIONAL
± 1/32
ANGULAR
± 1/2°

TCI
7878 N. 86th STREET
MILWAUKEE, WI 53224

KLR FRAME L (ILSCO LUGS)
TYPE 3R ENCLOSURE

DRN. BY DSW
DATE 10/05/04
DWG. NO. B KLRLE3R-3DG
SCALE TO FIT
APRVD.
SHT. 1 OF 1