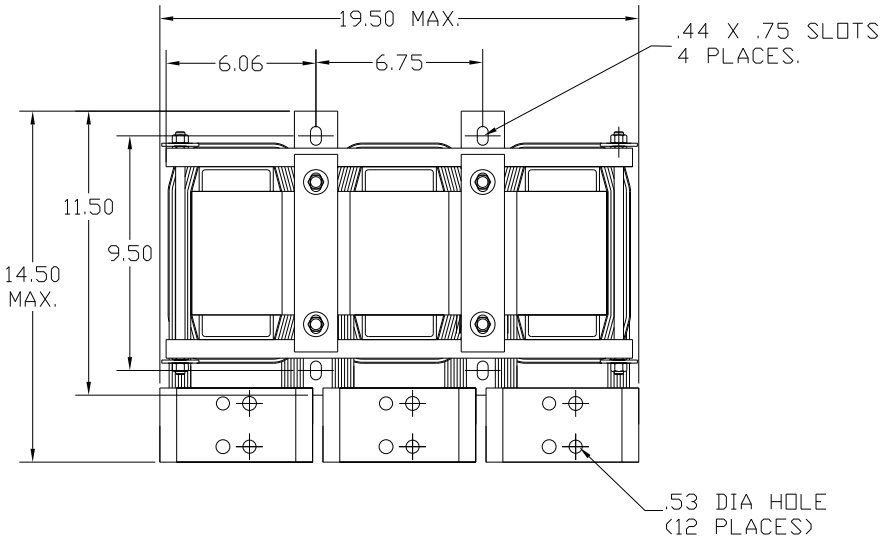

HP	CATALOG NO	--mH ±20%	__AMPS(A)	APPROX WT-LBS
900	KDRY4T	.068	1080	500

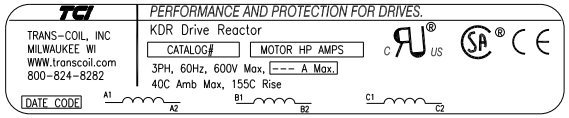

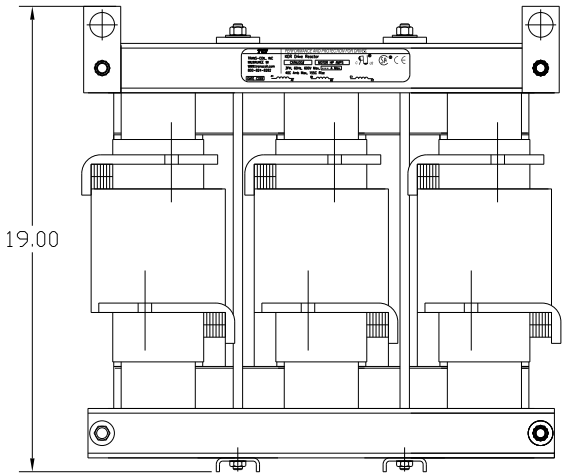

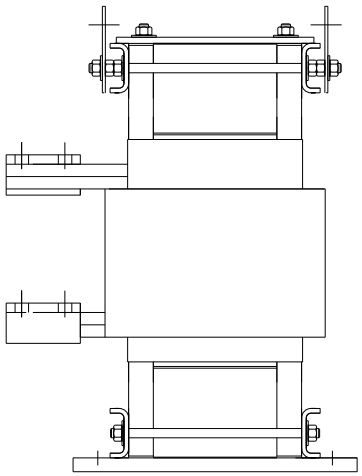

NO	REVISION	DATE	BY

TOLERANCES (EXCEPT AS NOTED)
DECIMAL
.XX ±.03
.XXX±.01
FRACTIONAL
± 1/32
ANGULAR
± 1/2°

TCI
7878 N. 86th STREET
MILWAUKEE, WI 53224

KDRY4T, 900HP
480 Volts, 1080 Amps

DRN. BY DSW
DATE 04/26/05
SCALE TO FIT
APRVD.
DWG. NO. C 102641DG
SHT. 1 OF1