480 Rated Voltage, 600 Max Voltage, High Z, Impedance.							
Part Number	Horsepower (HP)	Motor Amps (A)	Maximum Amps (A)	Inductance (uH)	Weight (LBS)	Losses (W)	Available Lug Kit
KDRS1HE3R	600	720	750	43.4	465	685	SLK20

Top View

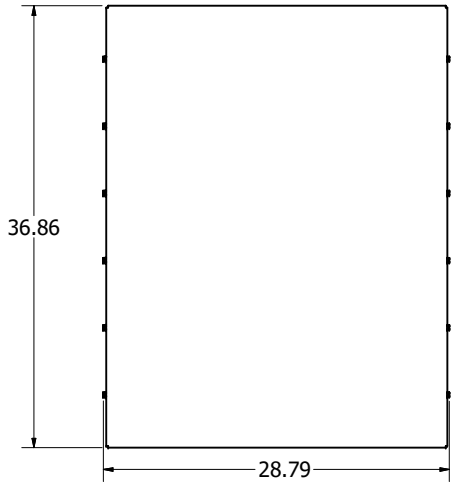

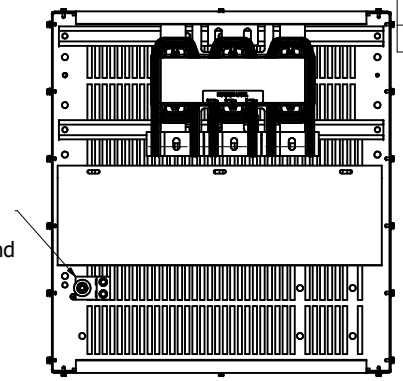

Front View With Front Cover

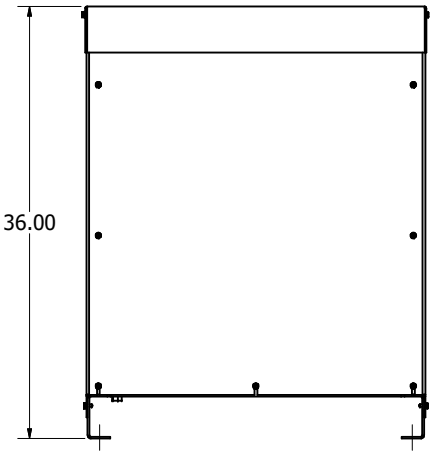

Front View Without Front Cover

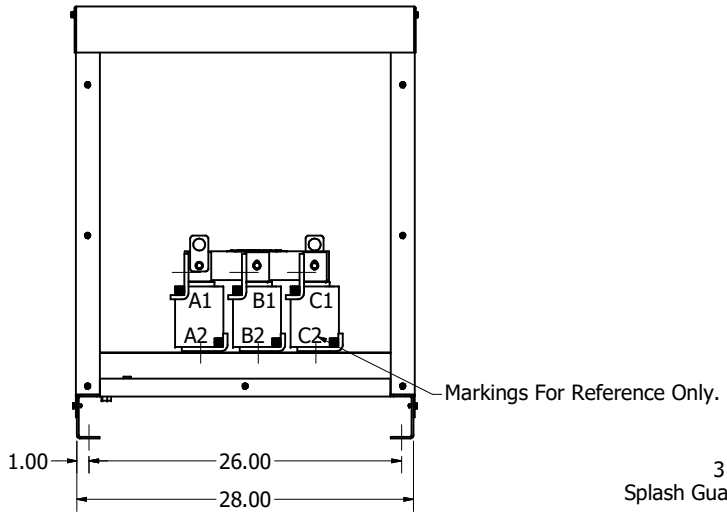

Side View

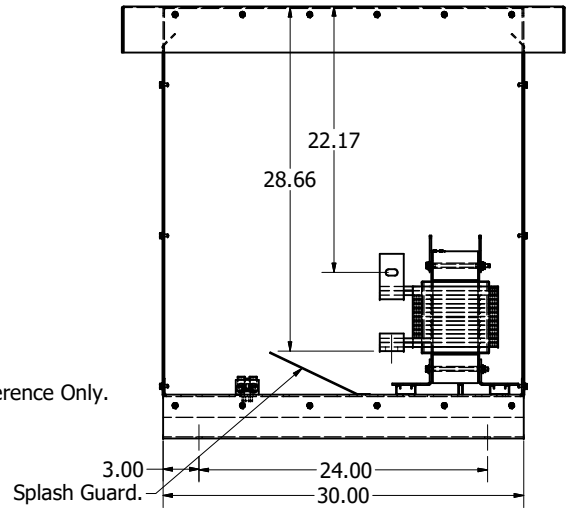

Bottom View

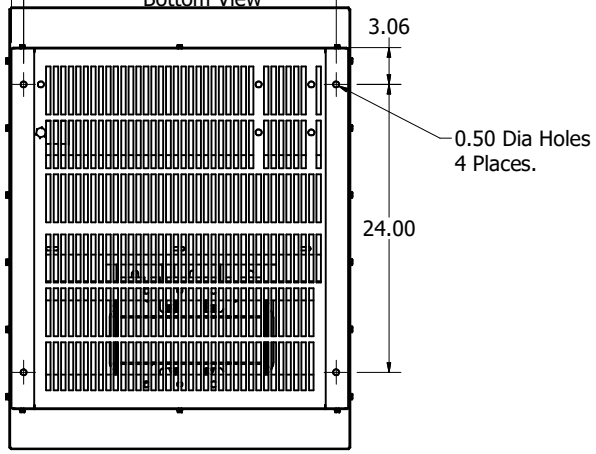

Wiring Diagram

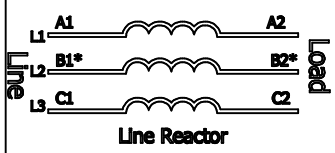

Line Reactor

* For single phase applications, use coils A and C, Isolate terminals B1 and B2.

Note:
1. UL file number: cULus Listed File E116124.
2. KDR Drive Reactors Comply With The Thermal and Altitude Standards Set Forth by NEMA ST20-1992.
3. For Terminal Torques And Wire Size See, KDR IOM Manual, Part Number 30895
4. Material(s) Shall be RoHS Compliant
5. Customer Is Responsible For Installation To Meet All National And Local Electrical Codes.

THE INFORMATION AND DESIGNS CONTAINED IN THIS DRAWING ARE CONFIDENTIAL AND THE PROPRIETARY PROPERTY OF ALLIED MOTION TECHNOLOGIES INC. AND ITS SUBSIDIARIES. NEITHER THIS DESIGN NOR ANY INFORMATION CONTAINED IN THIS DRAWING MAY BE REPRODUCED OR DISCLOSED TO OTHERS WITHOUT THE EXPRESS WRITTEN CONSENT OF ALLIED MOTION TECHNOLOGIES INC. AND ITS SUBSIDIARIES.

NO	REVISION	DATE	BY
H	6654, remove S1L, Lug kit chg. slk20	5/6/2024	DSW
G	6578 Remove KDRS2H	2/22/2024	DSW
F	5502, Update Watt Loss	2/2/2021	DSW

TOLERANCES (EXCEPT AS NOTED)
DECIMAL .XX ± .25 .XXX ± .10
FRACTIONAL ± 1/32
ANGULAR ± 1°

TCI An Allied Motion Company
W132N10611 Grant Drive
Germantown, WI 53022
© 2024 TCI, LLC

KDR S Frame, Copper Bus, Enclosed
Type 3R, Reactor Drawing

DRN. BY: DSW | DATE: 1/31/2005 | 105655-1DG
SCALE: 1/8 | APRVD: | SIZE: C | SHT 1 OF 1