TCI Part Number	Horsepower (HP)	Rated Amps (A)	Max Amps (A)	Weight (LBS)
KDRL1TTX1	125	121	156	100

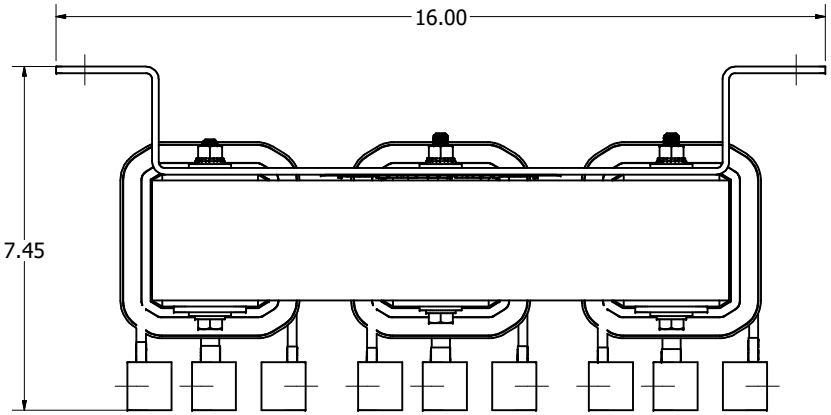

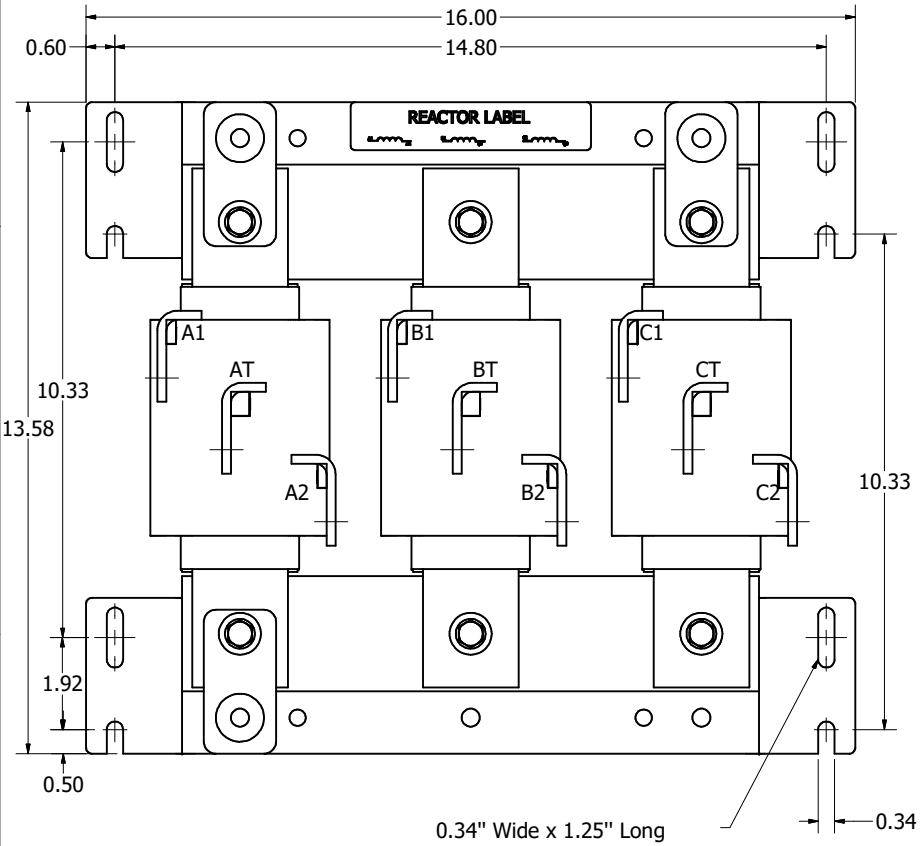

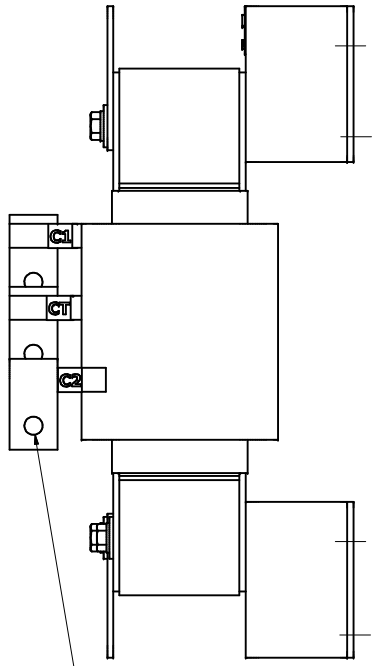

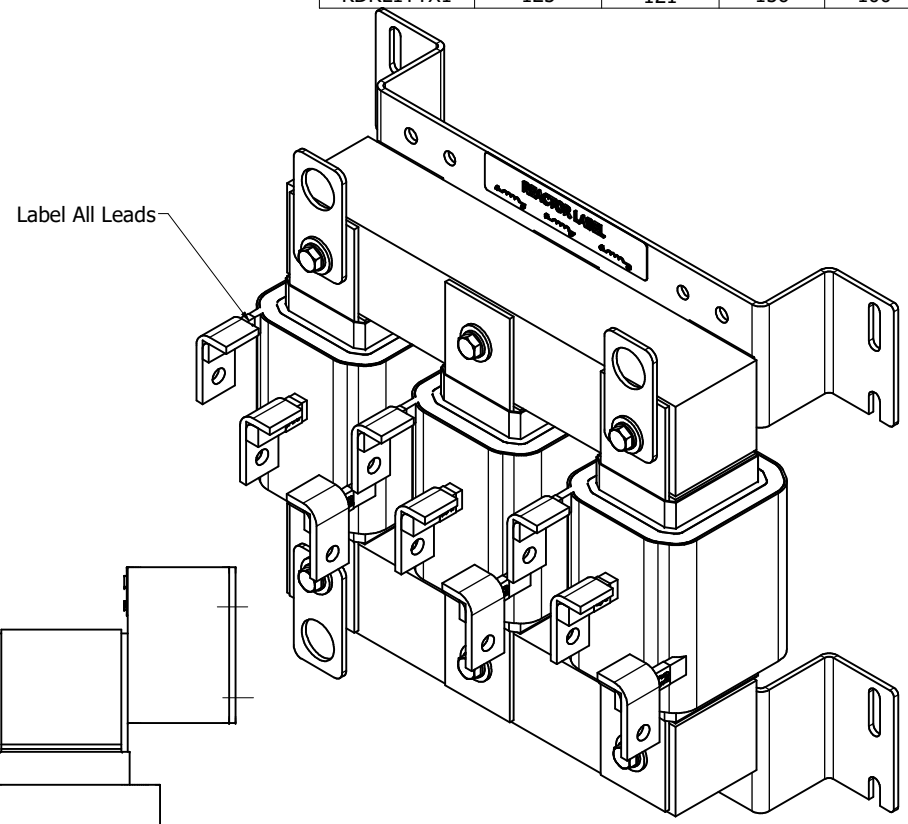

Customer Is Responsible For Installation to Meet All National And Local Electrical Codes.

Material(s) Shall be RoHS Compliant

THE INFORMATION AND DESIGNS CONTAINED IN THIS DRAWING ARE CONFIDENTIAL AND THE PROPRIETARY PROPERTY OF ALLIED MOTION TECHNOLOGIES INC. AND ITS SUBSIDIARIES. NEITHER THIS DESIGN NOR ANY INFORMATION CONTAINED IN THIS DRAWING MAY BE REPRODUCED OR DISCLOSED TO OTHERS WITHOUT THE EXPRESS WRITTEN CONSENT OF ALLIED MOTION TECHNOLOGIES INC. AND ITS SUBSIDIARIES.

NO	REVISION	DATE	BY
E	Update Title Block	2/24/2023	DSW
D	4751, Add third lift ring	5/20/19	DSW
C	Updated Bracket	5/10/18	DSW

TOLERANCES (EXCEPT AS NOTED)
DECIMAL .XX ± .03 .XXX ± .010
FRACTIONAL ± 1/32
ANGULAR ± 1°

TCI An Allied Motion Company
W132N10611 Grant Drive
Germantown, WI 53022
© 2023 TCI, LLC

KDRL1TTX1, Wall Mounted, HGP Reactor, 480V, 125HP

DRN. BY: DSW | DATE: 4/5/18 | 107646DG
SCALE: 1/2 | APRVD: | SIZE: C | SHT 1 OF 1