480 Rated Voltage, 600 Max Voltage, Low Z, Impedance.						
Part Number	Horsepower (HP)	Motor Amps (A)	Maximum Amps (A)	Inductance (uH)	Weight (LBS)	Terminal Hole Size (Inches)
KDRG1LC4	250	302	340	65	100	0.56
KDRG2LC4	300	361	370	57	100	0.56

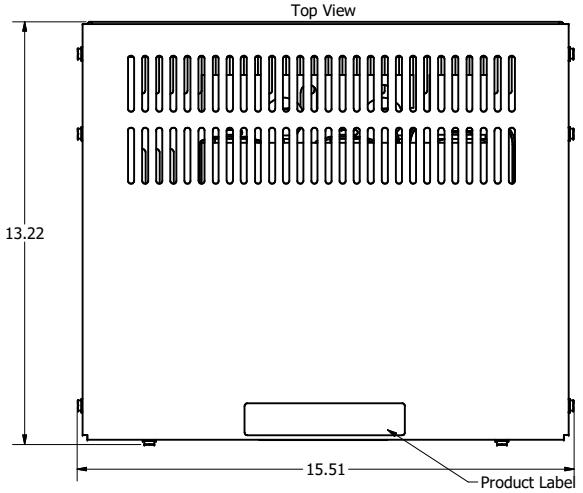

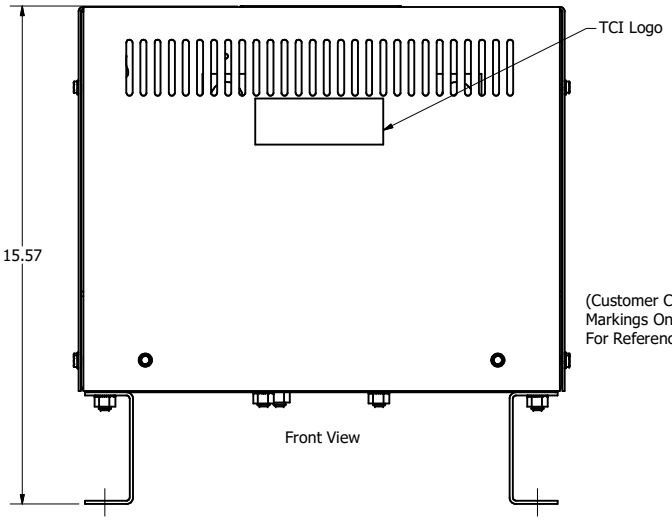

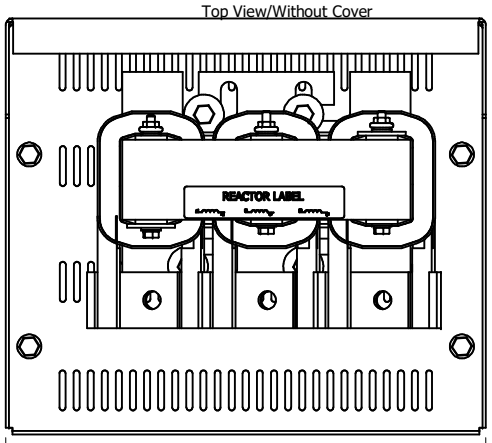

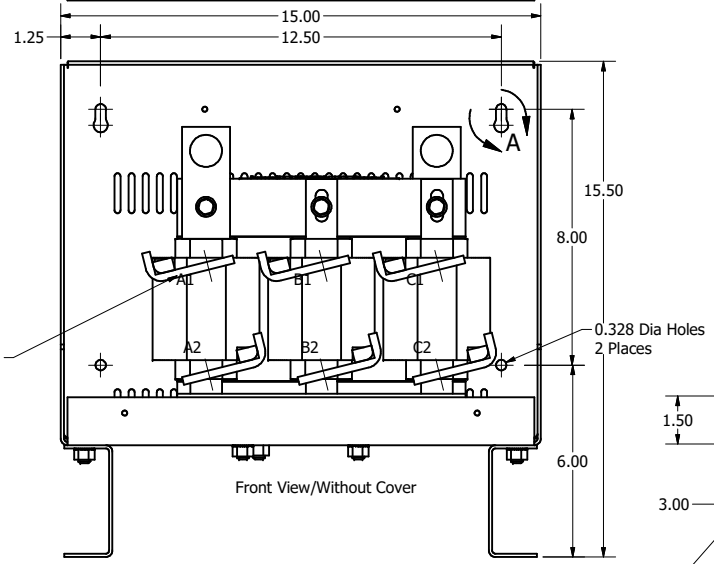

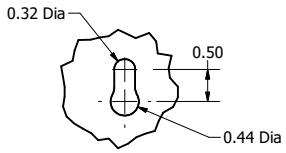

DETAIL A
SCALE 2 / 3

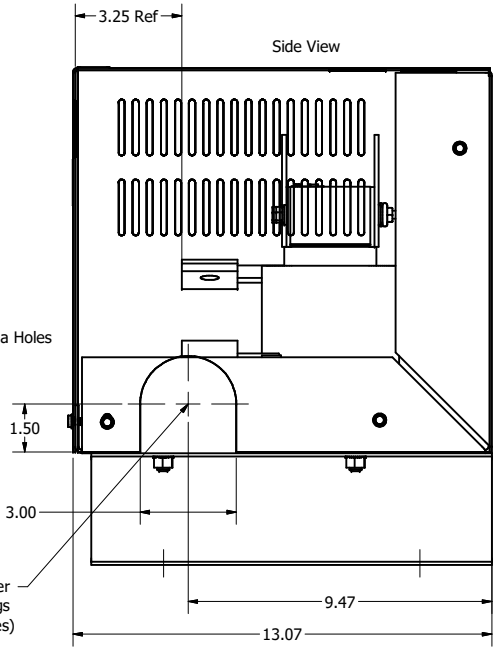

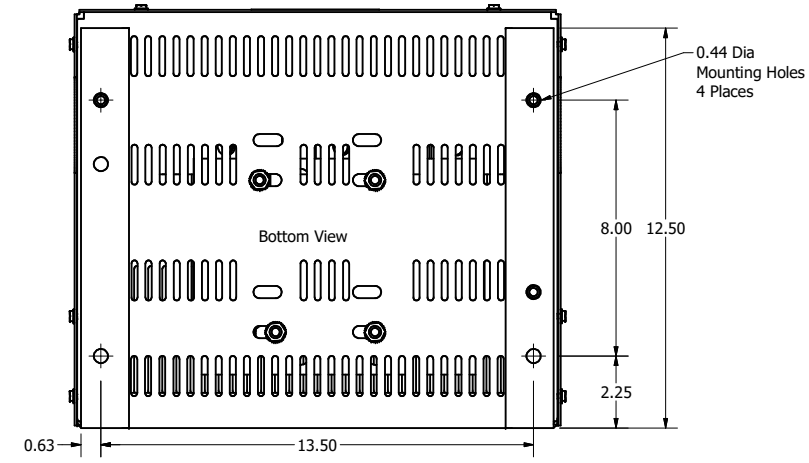

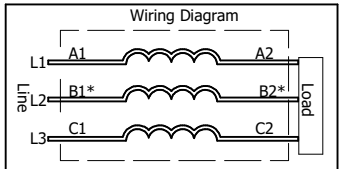

* For single phase applications, use coils A and C, Isolate terminals B1 and B2.

Notes:
1. Material(s) Shall be RoHS Compliant
2. Customer Is Responsible For Installation To Meet All National And Local Electrical Codes.

TCI, LLC CLAIMS PROPRIETARY RIGHTS IN THE MATERIAL HEREIN DISCLOSED. IT IS SUPPLIED WITHOUT PREDJUDICE TO ANY PATENT RIGHTS OF TCI AND MAY NOT BE REPRODUCED OR USED TO MANUFACTURE ANYTHING SHOWN THEREIN WITHOUT WRITTEN PERMISSION FROM TCI.

NO	REVISION	DATE	BY
F	5270, Upate Drawing		
F	Update Terminals On Inductor	5/29/01	RJC

TOLERANCES (EXCEPT AS NOTED)
DECIMAL .XX ± .25 .XXX ± .10
FRACTIONAL ± 1/16
ANGULAR ± 1°

TCI
W132 N10611 Grant Drive
Germantown, WI 53022

KDR, 480V, 250HP, 350HP, 3 Phase, NEMA 1
Input Line Inductor, Low Impedance
UL Recognized

DRN. BY DSW | DATE: 5/19/2020 | KDR-14DG
SCALE: 1/2 | APRVD: | SIZE: C
SHT 1 OF 1