TCI Part Number	Rated Amps (A)	Rated Voltage (V)	Hz	---uH ±5%	Approx Weight (LBS)	Attached Lug Kit
KLRUL250APTMG	250	480	60	191	275	SLK11
KLRUL305APTMG	305	480	60	157	285	SLK11
KLRUL250CPTMG	250	600	60	139	275	SLK11
KLRUL305CPTMG	305	600	60	196	285	SLK11

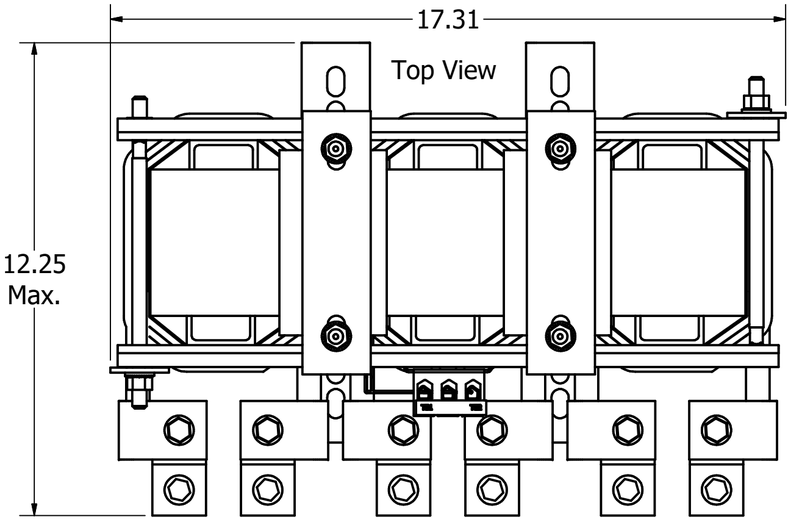

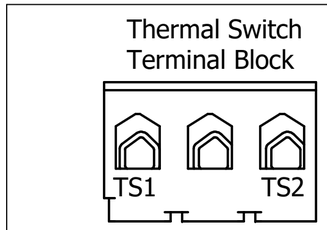

Wire Range: 18 AWG To 4 AWG.
Torque: 20 LB-IN (2.3 Nm)

Switch Opens on Temperature Rise
Contact Rating: 6A @ 120 VAC

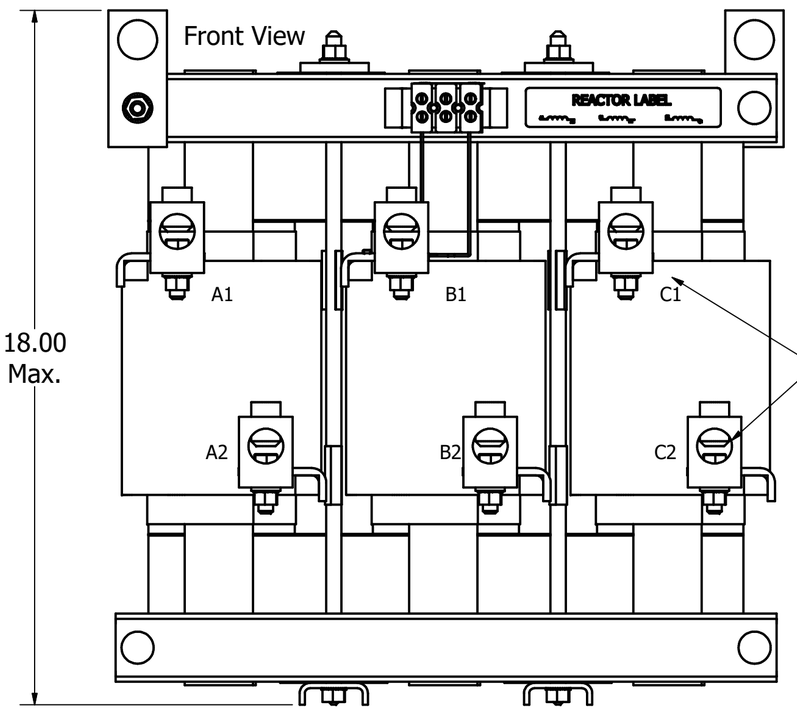

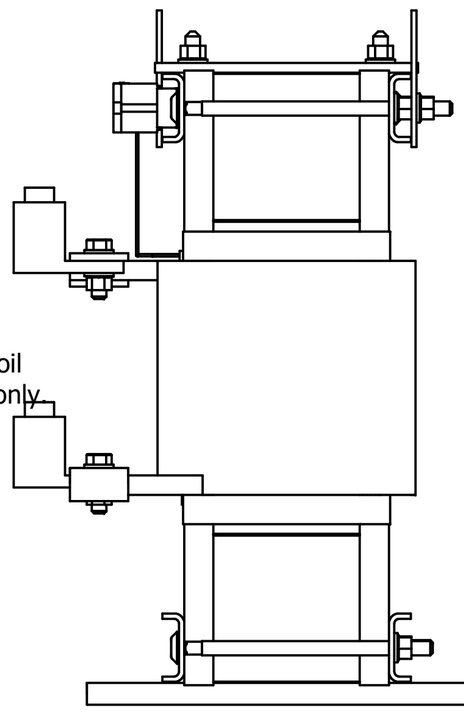

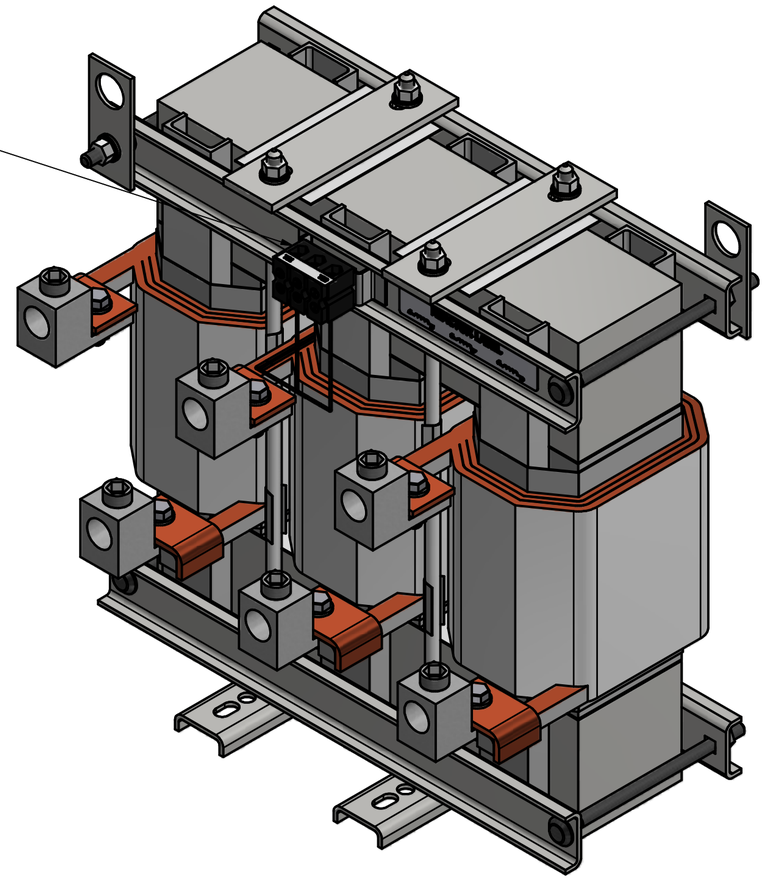

Wire Range	Tightening Torque
600MCM - 4 AWG	500 Lbs-In (56.5 N-m)

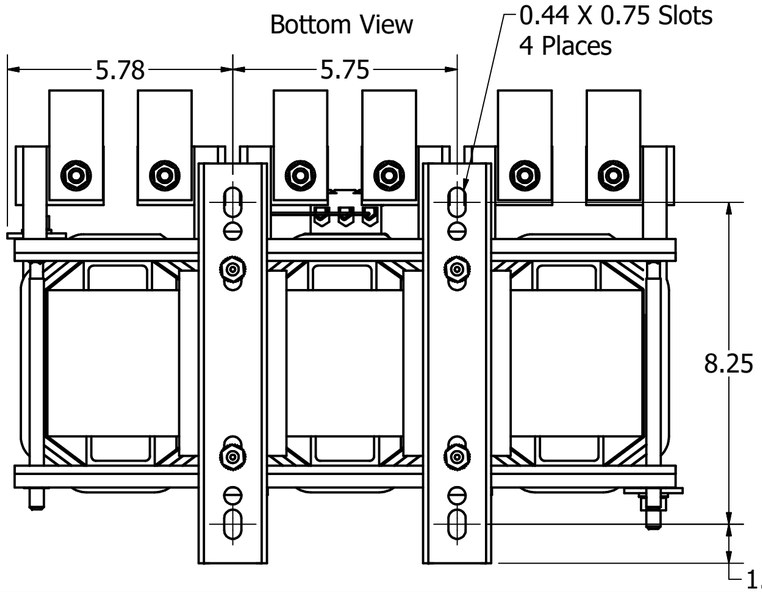

TCI, LLC
Germantown, WI. USA.
transcoll.com
800-824-8282

(800) 824-8282 transcoll.com

KLRUL Reactor
KLRUL— Motor Amps —
3PH, 50/60Hz,—V Rated, 600V Max, –A Max, RoHS
40C Amb Max, RoHS
Use 75C CU conductors only, Term Torque—lb-in

DATE CODE

Notes:

1. UL file number: cULus Listed File E116124.
2. KLR Reactors Comply With The Thermal and Altitude Standards Set Forth by NEMA ST20-1992.
3. Material(s) Shall be RoHS Compliant
4. Customer Is Responsible For Installation To Meet All National And Local Electrical Codes.

TCI, LLC CLAIMS PROPRIETARY RIGHTS IN THE MATERIAL HEREIN DISCLOSED. IT IS SUPPLIED WITHOUT PREDJUDICE TO ANY PATENT RIGHTS OF TCI AND MAY NOT BE REPRODUCED OR USED TO MANUFACTURE ANYTHING SHOWN THEREIN WITHOUT WRITTEN PERMISSION FROM TCI.

NO	REVISION	DATE	BY
A	As Designed	02/26/20	JRN

TOLERANCES (EXCEPT AS NOTED)
DECIMAL
.XX ± .25
.XXX ± .10
FRACTIONAL
± 1/16
ANGULAR
± 1°

W132 N10611 Grant Drive
Germantown, WI 53022

KLRUL X Frame, 250A, 305A
Reactor Drawing, UL Listed

DRN. BY: JRN | DATE: 02/26/20 | 108476DG
SCALE: 1/2 | APRVD: | SIZE C | SHT 1 OF 1